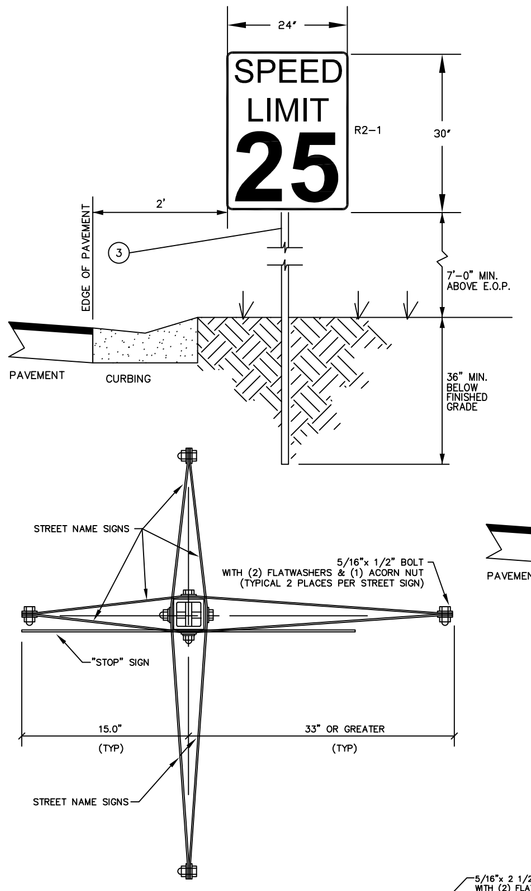

PLAN VIEW
NOT TO SCALE

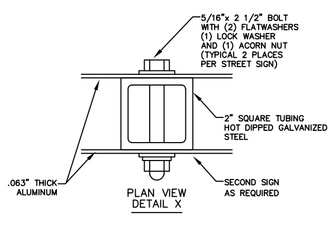

PLAN VIEW
DETAIL X

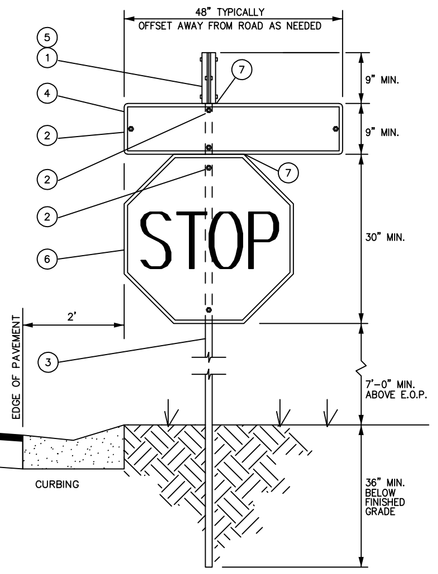

FRONT ELEVATION
NOT TO SCALE

LEGEND:
(3) = SEE NOTE 3

NOTES FOR DUAL STREET SIGN WITH STOP SIGN:

1. STREET SIGN LENGTH TO BE 24" MINIMUM & 60" MAXIMUM. LONGER SIGNS BY SPECIAL PERMISSION FROM THE CITY ONLY. STREET NAME SIGNS MAY BE ON SEPARATE POST INSTALLATIONS WHEN REQUIRED USE 3M® OR APPROVED EQUAL GREEN FACE SHEETING MATERIAL WITH 1/2" WHITE BORDER ON EDGE OF FACE
2. STAINLESS STEEL FLATWASHER TO FACE EACH SIDE; ADDITIONAL LOCKWASHER TO GO BETWEEN ACORN NUT & FLATWASHER ON OPPOSITE SIDE FROM BOLT HEAD. USE ALL STAINLESS STEEL FASTENERS. ALL HOLES TO BE 5/16" DIA. MIN. TO 7/16" DIA. MAX. HOLES ON END OF STREET SIGN FOR REQUIRED PINNING OF (2) SIGNS TOGETHER
3. SIGN POST SHALL BE 2" (OUTSIDE) SQUARE TUBING, HOT DIP GALVANIZED, PRE-PUNCHED, 12 GA. STEEL POST SHALL BE 14' MIN. TOTAL LENGTH, ONE PIECE. "STOP" SIGN SHALL BE 7' (MIN.) ABOVE E.O.P. AT 2' CLEAR FROM E.O.P. TO EDGE OF STOP SIGN FACE. POST TO BE SET 3' MIN. IN GROUND, AND EARTH PACKED FIRMLY AROUND POST END WITH TAMPING ROD
4. LOWER STREET SIGN SHALL NOT BE MOUNTED PERPENDICULAR TO "STOP" SIGN FACE; THESE TWO SIGN SURFACES ARE TO OCCUPY THE SAME VERTICAL PLANE
5. TOP END OF SIGN POST SHALL MEET TOP EDGE OF TOP SIGN
6. "STOP" SIGN FACE SHALL BE 3M® OR APPROVED EQUAL, "HIGH INTENSITY."
7. ALL SIGNS SHALL BE ALUMINUM BLANKS, 0.063" THK. FOR STREET SIGNS, 0.080" THK. FOR STOP SIGNS, 3M® OR APPROVED EQUAL COVERED
8. SIGNING LAYOUT REQUIREMENTS: "STREET NAME" SHOWN

TYPICAL STROKE .75"	5.0" "D" SERIES, UPPER CASE
TYPICAL SINGLE GAP .75"	4.0" "C" SERIES, LOWER CASE
TYPICAL GAP & A HALF 1.25"	2.0" "C" SERIES, UPPER CASE
TYPICAL DOUBLE GAP 1.50"	

9. DETAIL "Y" SHOWS REQUIRED USE OF THE 5" SERIES "D" UPPER CASE LETTER WITH 4" LOWER CASE LETTERS FOLLOWING THE INITIAL LETTER OF THE STREET NAME.
   PUBLIC ROAD SIGNS SHALL HAVE A GREEN BACKGROUND WITH WHITE LETTERING. PRIVATE ROAD SINGS SHALL HAVE A WHITE BACKGROUND WITH BLUE LETTERING.
10. SHEETING: ALL SHEET MATERIAL SHALL BE 3M® BRAND OR APPROVED EQUAL. INK SCREENED STREET NAME SIGNS SHALL BE 3M® OR APPROVED EQUAL INK.
11. INSPECTION: ALL ERECTED STREET NAME SIGN MATERIAL SHALL BE SUBJECT TO REJECTION.
12. SPEED LIMIT SIGNS INDICATING THE STATUTORY SPEED LIMITS SHALL BE INSTALLED AT THE ENTRANCES. ADDITIONAL SIGNS MAY BE REQUIRED BY THE CITY MANAGER OR DESIGNEE.

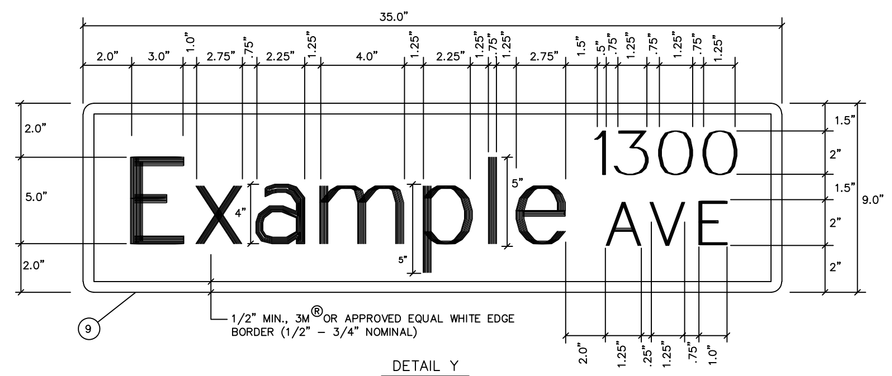

DETAIL Y
NOT TO SCALE

OFF STREET PARKING STALL REQUIREMENT TABLE

PARKING ANGLE	WIDTH OF STALL	DEPTH OF STALL	MINIMUM WIDTH OF TRAVELWAY	LENGTH OF CURB PER CAR
COMMERCIAL 0°	10'–0"	23'–0"	24'–0"	23'–0"
COMMERCIAL 45°	10'–0"	19'–10"	16'–0"	12'–9"
COMMERCIAL 60°	10'–0"	21'–0"	18'–0"	10'–5"
COMMERCIAL 90°	10'–0"	20'–0"	24'–0"	10'–0"
RESIDENTIAL	8'–0"	20'–0"	10'–0"	
HANDICAP ACCESSIBLE PARKING	12'–0"	20'–0"	AS COMMERCIAL ABOVE	

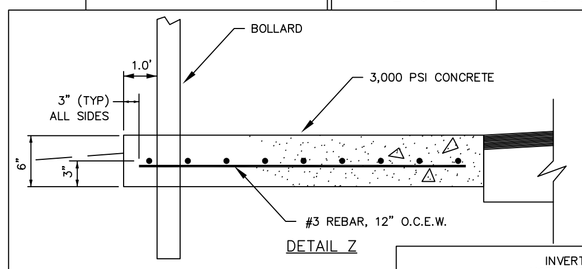

DETAIL Z

DUMPSTER PAD NOTES:
1. FOR MULTIPLE DUMPSTERS ON A SINGLE PAD, SCREENING SHALL REQUIRED AROUND THE PERIMETER OF THE PAD.
2. DUMPSTER PADS WITH MULTIPLE DUMPSTER WILL BE APPROVED ON A CASE BY CASE BASIS.

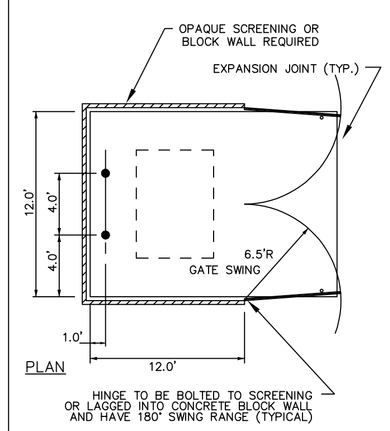

PLAN

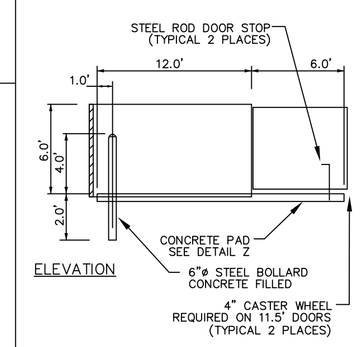

ELEVATION

SINGLE DUMPSTER PAD
NOT TO SCALE

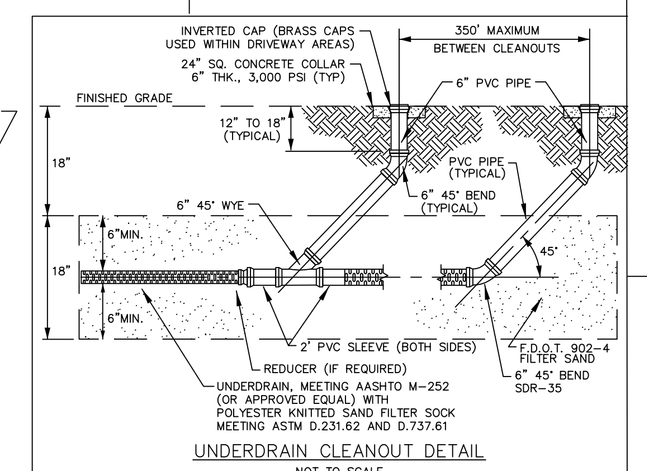

UNDERDRAIN CLEANOUT DETAIL
NOT TO SCALE

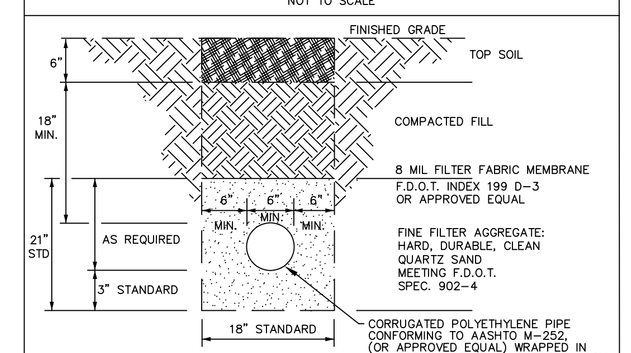

PE PIPE UNDERDRAIN
NOT TO SCALE

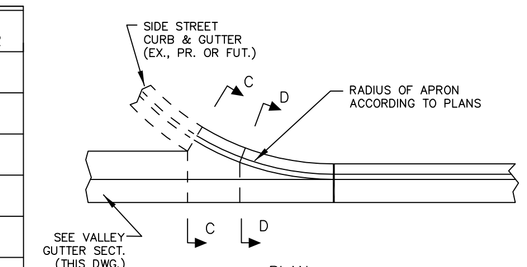

PLAN

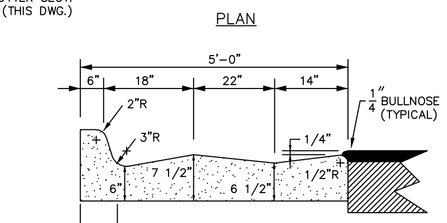

SECTION C–C

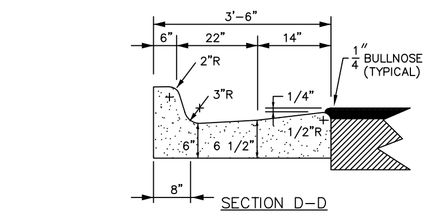

SECTION D–D

VALLEY GUTTER TRANSITION
NOT TO SCALE

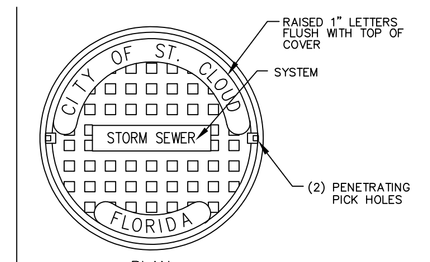

PLAN

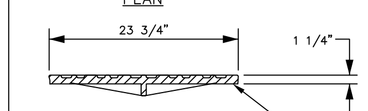

COVER

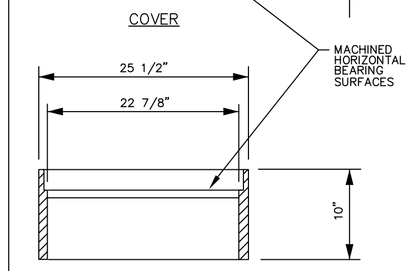

RING

RING & COVER NOTES:
1. RING & COVER TO BE USF 1182 OR APPROVED EQUAL
2. RING & COVER TO BE USF 195E OR APPROVED EQUAL FOR "BUILD UP" TYPE (SEE DWG# 12001)

FLUSH MOUNT RING & COVER

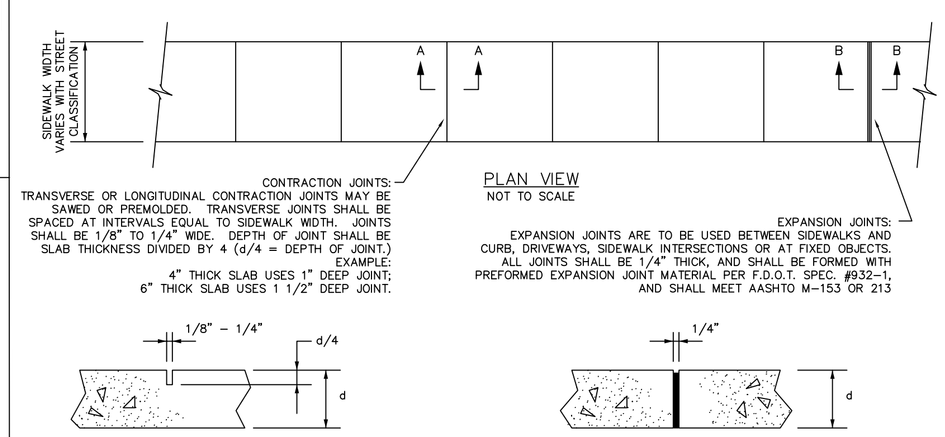

PLAN VIEW
NOT TO SCALE

SECTION A–A
NOT TO SCALE
CONTRACTION JOINT

SECTION B–B
NOT TO SCALE
EXPANSION JOINT

SIDEWALK NOTES:
1. ALL SIDEWALKS SHALL BE CONSTRUCTED WITHIN CITY R.O.W.
2. WIDTH OF SIDEWALK VARIES WITH STREET CLASSIFICATION
3. ALL PLACES WHERE SIDEWALK CROSSES A DRIVEWAY SHALL BE 6" MIN. THICKNESS OF CONCRETE WITH 6"x6" #10 W.W.M. OR 2,500 PSI FIBERMESH CONCRETE

TYPICAL CONCRETE SIDEWALK DETAILS

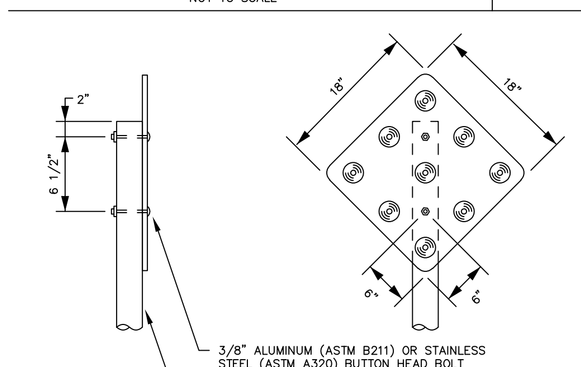

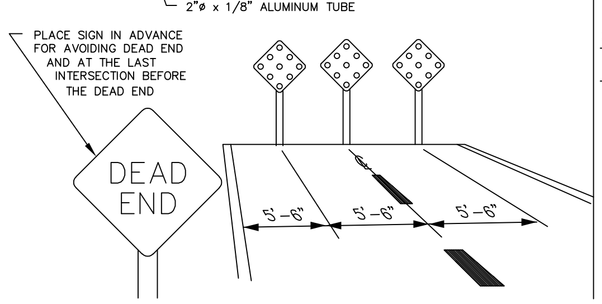

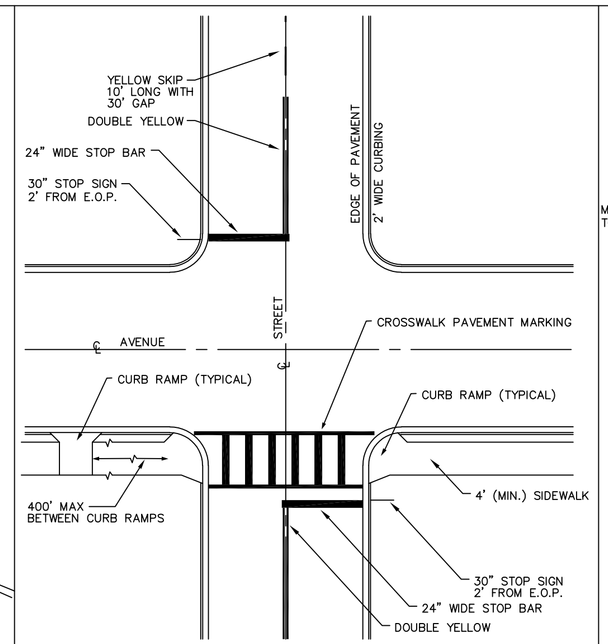

INTERSECTION STRIPING DETAIL
SHALL MEET MINIMUM CURRENT A.D.A. AND F.D.O.T. STD. SPECS.

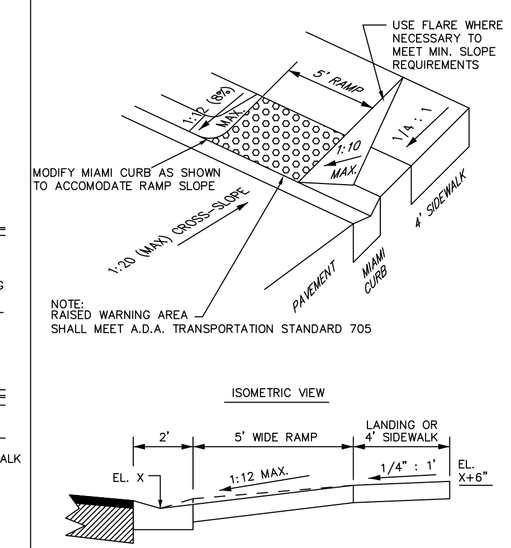

CROSS-SECTION

CURB RAMP DETAIL
SHALL MEET MINIMUM CURRENT A.D.A. AND F.D.O.T. STD. SPECS.

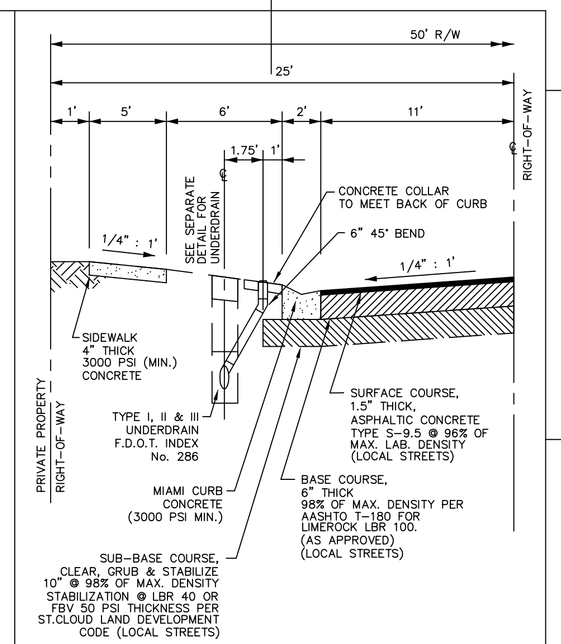

TYPICAL LOCAL ROAD HALF–SECTION
NOT TO SCALE

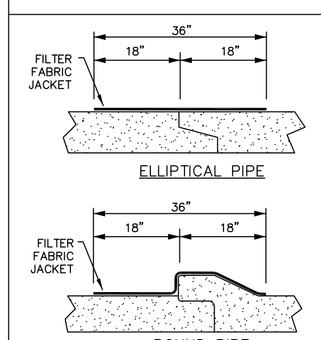

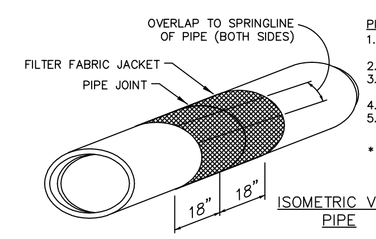

PIPE JOINT NOTES:
1. ALL JOINTS OF ALL PIPE SHALL BE WRAPPED WITH FILTER FABRIC WHICH SHALL EXTEND A MINIMUM OF 18" ON BOTH SIDES OF JOINT (FILTER FABRIC PER F.D.O.T. INDEX 199 D-3)
2. FILTER FABRIC SHALL OVERLAP ON TOP OF PIPE DOWN TO SPRING LINE OF PIPE ON BOTH SIDES
3. ALL STORM DRAINAGE PIPE SHALL BE A MINIMUM 15" DIAMETER PIPE OR ITS HYDRAULIC EQUIVALENT 12" X 18" E.R.C.P.
4. CONFLICT STRUCTURES SHALL BE APPROVED ON A CASE BY CASE BASIS
5. ALL STORM INLETS, CATCH BASINS & MANHOLES SHALL BE PRECAST CONCRETE SEE F.D.O.T. ROAD & TRAFFIC DESIGN STANDARDS (LATEST EDITION)

* (EXTERIOR WALL JOINTS SHALL BE WRAPPED WITH CON-WRAP, E-Z WRAP OR APPROVED EQUAL)

FILTER FABRIC JACKET FOR PIPE JOINTS

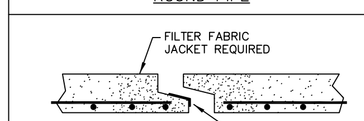

PROFILE RUBBER WATER-TIGHT 'O'-RING GASKET
BEFORE PULL-UP

CONCRETE PIPE JOINTS

PIPE REQUIREMENTS:
1. REINFORCED CONCRETE PIPE (ASTM C 76) CLASS III OR STRONGER BASED ON "D" LOAD; OR FRCP (FIBER-MIX) CONCRETE PIPE; PER: ASTM C1450 AND F.D.O.T. SPEC. SECTION 941., OR LATEST EDITION.
2. PRE-STRESSED CONCRETE PIPE (AWWA C301) SHALL BE APPROVED ON A CASE BY CASE BASIS
3. ALTERNATIVE PIPE MATERIALS MAY BE USED FOR PRIVATELY MAINTAINED STORMWATER SYSTEMS.

GENERAL NOTES:
1. ALL PAVEMENT MARKINGS AND TRAFFIC CONTROLS SHALL COMPLY WITH THE "MANUAL OF UNIFORM TRAFFIC CONTROL DEVICES" (M.U.T.C.D.), LATEST EDITION AS PUBLISHED BY FEDERAL HIGHWAY ADMINISTRATION.
2. HANDICAP RAMPS SHALL COMPLY WITH THE "AMERICANS WITH DISABILITIES ACT" OF 1992
3. ALL PAVING AND DRAINAGE STRUCTURES (INCLUDING CURBING) SHALL COMPLY WITH F.D.O.T. "STANDARDS FOR ROAD AND BRIDGE CONSTRUCTION," LATEST EDITION.
4. RECORDINGS FROM CLOSED CIRCUIT TELEVISION INSPECTIONS CONDUCTED BY A CONTRACT TV INSPECTOR EMPLOYED BY THE DEVELOPER SHALL BE PROVIDED TO THE CITY ON A DVD AND INCLUDE A WRITTEN REPORT CORRESPONDING TO THE DVD RESULTS. A POST CLOSED CIRCUIT TELEVISION INSPECTION SHALL BE REQUIRED BY THE DEVELOPER PRIOR TO THE EXPIRATION OF THE MAINTENANCE BOND.

PUBLIC SERVICES DEPARTMENT
1300 9th STREET
ST. CLOUD, FL 34769
(407) 957-7344

ALL SURVEY DATA SHOWING PHYSICAL FEATURES WERE OBTAINED BY THE ENGINEER INCIDENTAL TO DESIGN AND NO LAND SURVEYING CERTIFICATION SHOULD BE IMPLIED

NOTES:

ORIGINAL DESIGN BY

THIS DOCUMENT WILL BE CONSIDERED A COPY ONLY, UNLESS EMBOSSED BY A REGISTERED ENGINEERS SEAL

REVISIONS

REV. NO	DATE	CK	AP	DESCRIPTION
	DR: CC 3/19	CK: KF 3/19	AP: KF 3/19	
	DR: KF 1/19	CK: KF 1/19	AP: KF 1/19	UPDATED INTERSECTION, CURB RAMP AND LOCAL ROAD DETAILS.
	DR: KF 9/19	CK: KF 9/19	AP:	UPDATED PIPE MATERIAL DETAIL

DRAWN BY: | DATE: | CHECKED BY: | DATE:
SCALE: NONE | APPROVED BY: | DATE:
FILENAME: 15-STORMWATER-STREETS-AND-SIDEWALKS
XREF'S: XREFS

DRAWING NUMBER: D-15-012012
SHEET 15 OF 18

CITY OF ST. CLOUD FLORIDA — Celebrating Small Town Life

STANDARD DRAWING
STREETS AND STORMWATER

APPROVED BY
KEVIN FELBLINGER, P.E. CFM
FL REG. No. 68532
ENGINEERING MANAGER/ CITY ENGINEER
DATE